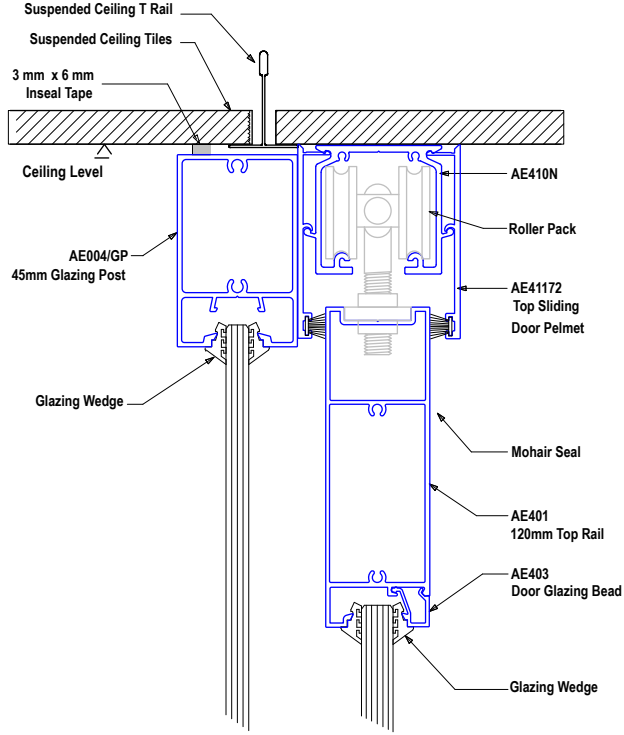
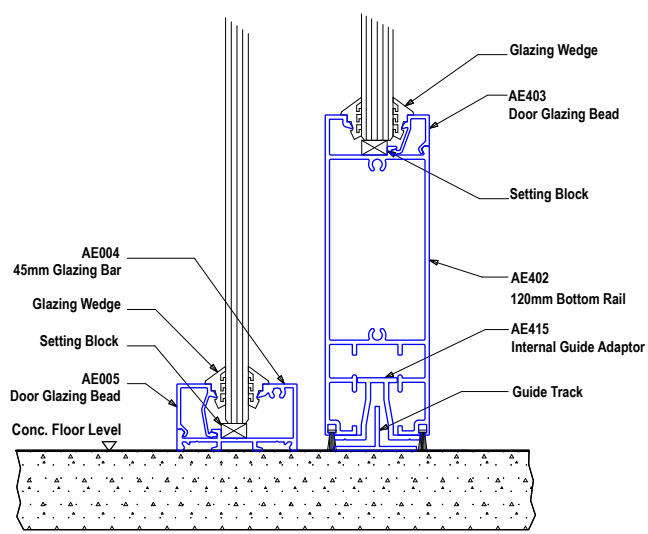
Selected Glazing To
Comply With Glazing
Standards